Property of Yanmar Marine International (All rights reserved).

DETAIL OF COUPLING

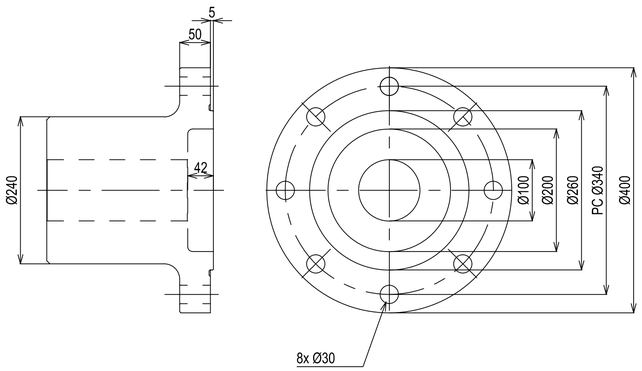

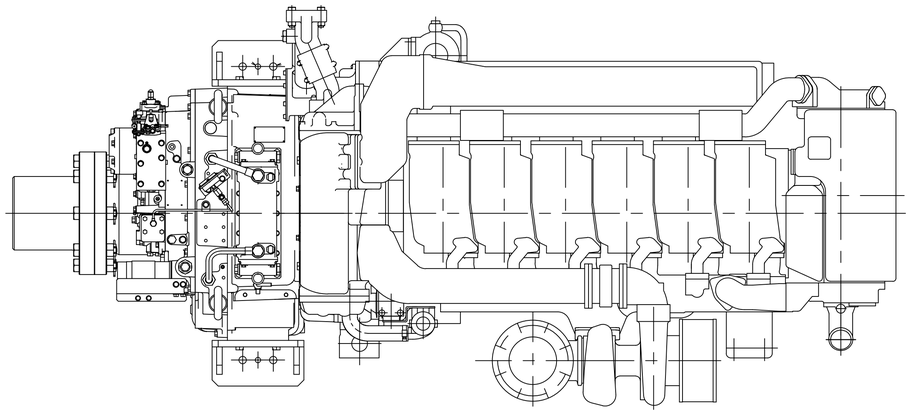

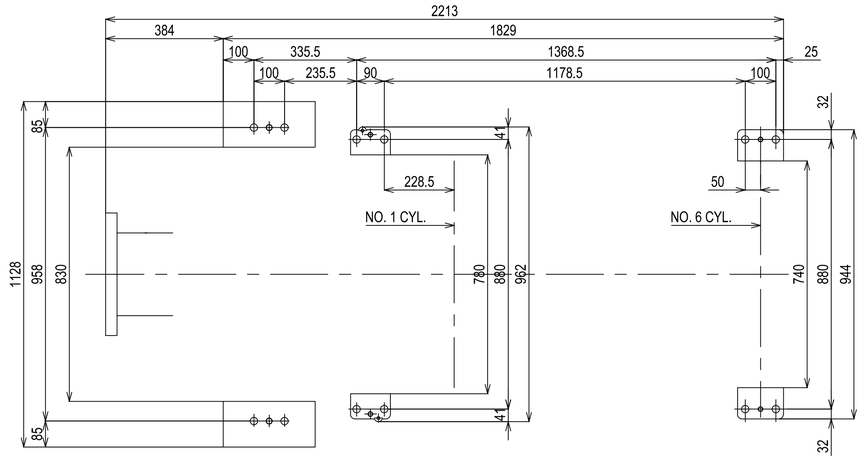

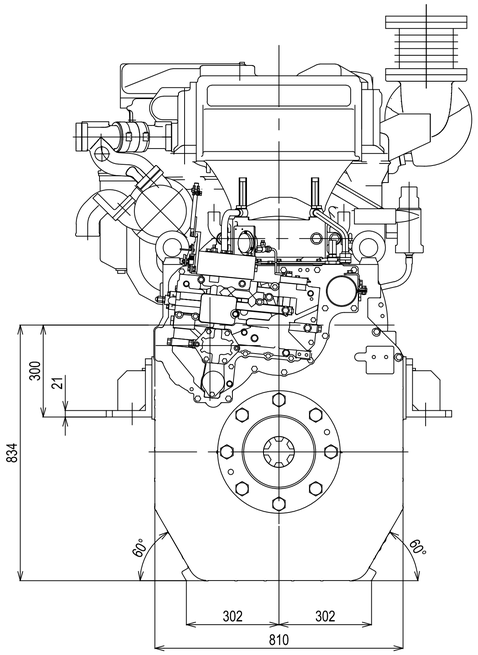

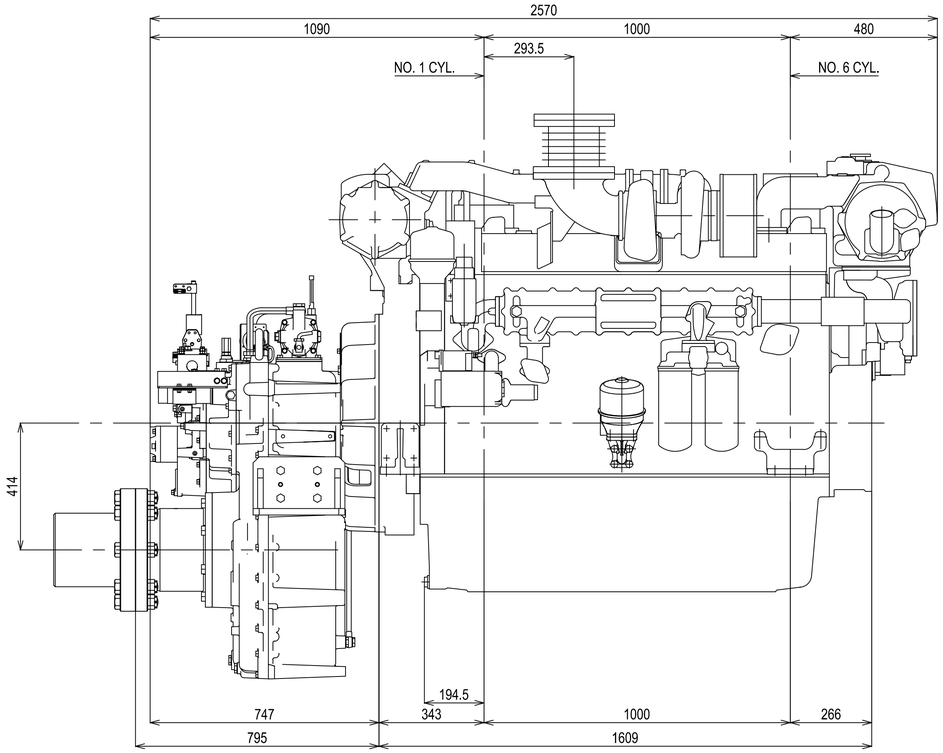

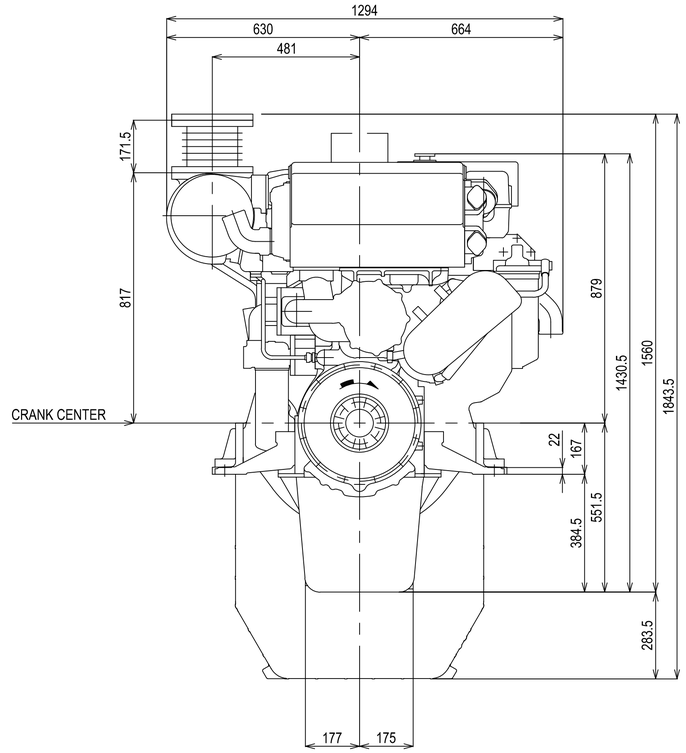

DETAIL OF MOUNTING BLOCK

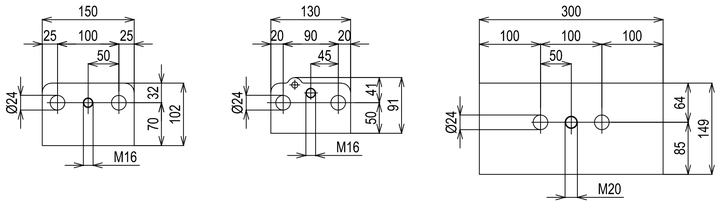

CONCEPT

Serie:	6AY	Engine:	6AYM-WSTxYX240L	Rollease:	R2011-1
Scale:	1:10 (1:5)	Date:	01-01-2011	Dimensions:	mm

YANMAR